radwag.com

AS 60/220.R2 PLUS Analytical Balance

WL-104-1052

More information on the website
radwag.com/en/info,w1,NQ5



The drawings, photos and graphics used are for illustrative purposes only.

Functions

- Autotest
- Dosing
- Percent Weighing
- Totalizing
- Parts counting
- Peak hold
- Newton unit measurement
- Statistics
- Checkweighing
- Under-pan weighing
- GLP Procedures
- Animal weighing
- Density determination

Datasheet

Metrological parameters	
Maximum capacity [Max]	60 / 220 g
Minimum load	1 mg
Readability [d]	0.01 / 0.1 mg
Verification unit [e]	1 mg
Tare range	-220 g
Minimum weight (USP)	24 mg

Metrological parameters	
Minimum weight (U=1%, k=2)	2.4 mg
Standard repeatability [Max]	0.08 mg
Standard repeatability [5% Max]	0.012 mg
Permissible repeatability [Max]	0.1 mg
Permissible repeatability [5% Max]	0.02 mg
Linearity	±0.05 / 0.2 mg
Stabilization time	2 s
Adjustment	internal (automatic)
OIML Class	I
Physical parameters	
Leveling system	manual
Display	5.3” LCD (backlit)
Weighing chamber doors	manual
Delivery components	Balance, weighing pan, weighing pan shield, centring ring, bottom cover, power supply, fabric dust cover.
Weighing pan dimensions	ø90 open-work pan + ø85 (option) mm
Packaging dimensions W x D x H	545×455×575 mm
Net weight	7.5 kg
Gross weight	11 kg
Construction	
Protection class	IP 43
Communication interface	
Communication interface	2×RS232[1], 2×USB-A (interchangeable), USB-B, Wi-Fi (option)
Electrical parameters	
Power supply	Adapter: 100 – 240V AC 50/60Hz 0.6A Max; 12V DC 1.2A Balance: 12 – 15V DC 0.7A max; 3 – 5.5W*
Power consumption max.	3 W
Environmental conditions	
Operating temperature	+10 – +40 °C
Relative humidity	40% – 80%

Repeatability is expressed as a standard deviation from 10 weighing cycles.
Stabilization time depends on the ambient conditions and the dynamics of weighing pan loading; specified for FAST profile.
* Power consumption depends on the terminal configuration as well as the number and type of external devices connected.
[1] Barcode scanners, available as weighing instrument accessory, communicate with the instrument via RS232 interface exclusively.

* Wi-Fi® is a registered trademark of Wi-Fi® Alliance.

Additional fee for verification

Accessories (Additional Fee)

Antivibration Tables
Holders for laboratory flasks
Balance Storage Case
RS 232, RS 485 cables

Power Adapters
Cigarette lighter receptacle power supply cables
Density determination KIT
USB cable (scale - printer)
Professional Weighing Tables
Barcode scanners
Holders for test tubes and filters
Workstation for Pipettes Calibration

Displays
Protective cover for balances
Weighing dishes
Antistatic ionizer
Receipt Printer
Under-pan weighing
RS 232 cables (scale - printer)

Software (Additional Fee)

- RAD Key [WX-010-0005]
- Alibi Reader [WX-010-0114]
- RADWAG Development Studio [WX-010-0104]
- R-Panel [WX-010-0187]
- R-Lab [WX-010-0080]

Device dimensions W x D x H

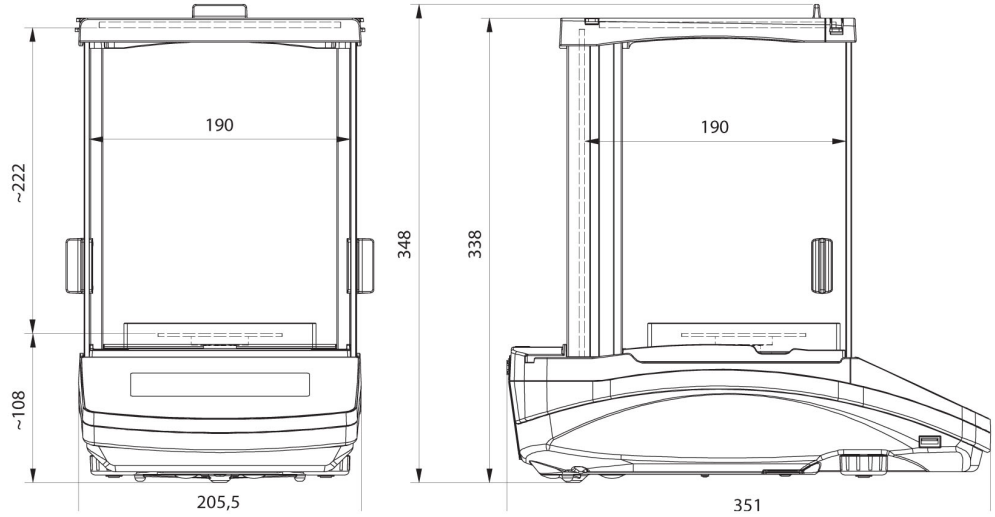

AS R2, d = 0.01 mg

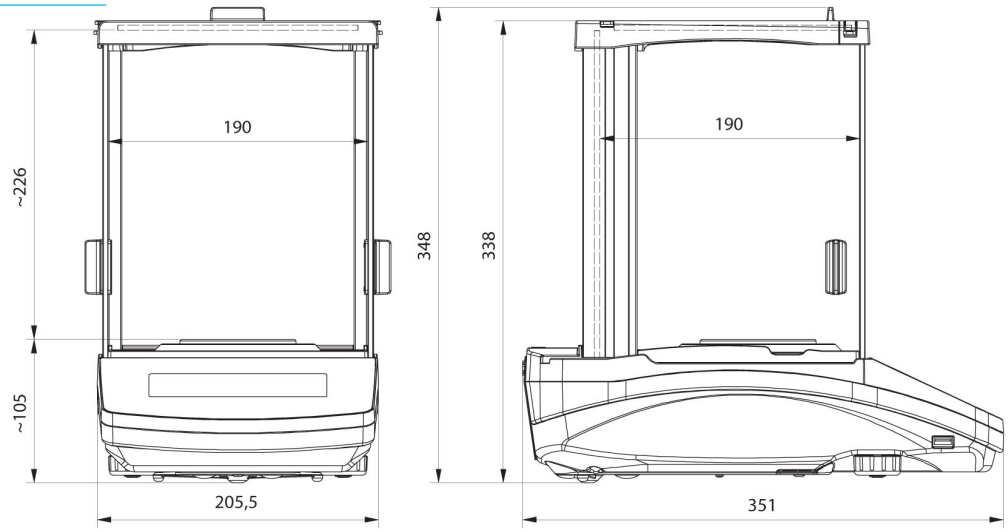

AS R2, AS R1 d = 0.1 mg