## WTB6

Ideal for the temperature control of ointments, emulsions, samples, plates and nutrient solutions in the laboratory, as well as warm storage and calibration in the industrial segment



On this page, you can find all the essential technical data on the Memmert water bath. Our customer relations team will be pleased to help if you want further information. If you should require a customised special solution, please contact our technical specialists at sales@memmert.com.

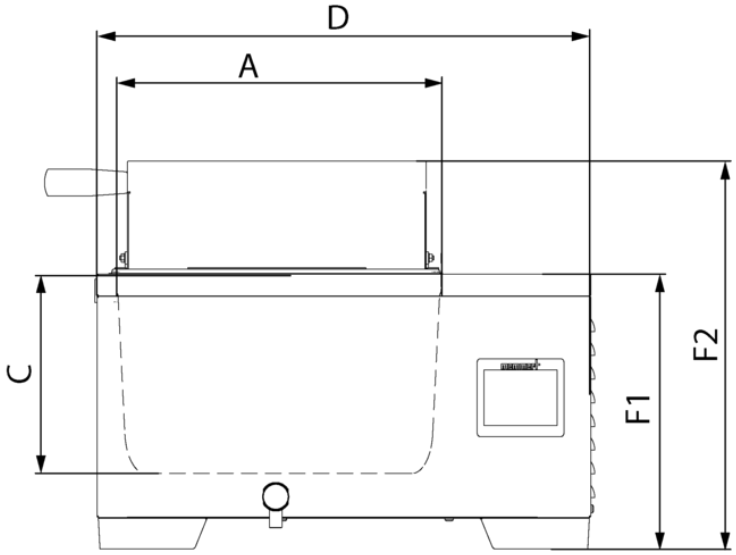


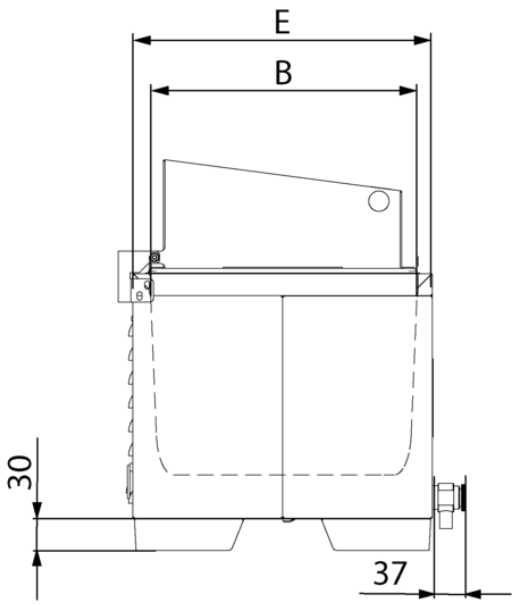



Memmert GmbH + Co. KG | Tel. +49 (0) 9122/925-0 | E-Mail info@memmert.com

## Temperature

| | |
|---|---|
| **Temperature sensor** | digital temperature sensor, mounted on the outside of the bath |
| **Temperature** | Setting Celsius / Fahrenheit |
| **Working temperature range** | at least 5 above ambient to +100 (with cover, depending on ambient pressure) |
| **Setting temperature range** | +10 to +100 °C |
| **Setting accuracy temperature** | 0.1 °C |

## Control technology

| | |
|---|---|
| **Calibration** | 2-point calibration |
| **Controller** | intuitive 3.5" colour graphic display with touch screen |
| **Controller** | digital display of set and actual temperature and of (remaining) programme time |

## Safety

| | |
|---|---|
| **Temperature control** | two-stage safety system to prevent overtemperature (pressure sensor for level monitoring, thermal fuse for heating shutdown in case of error) |
| **Temperature control** | individually adjustable overtemperature alarm, visual and acoustic |
| **Temperature control** | Independent temperature limiter to switch off the heating in case of failure |
| **Autodiagnostic system** | microprocessor PID-temperature controllerwith integrated autodiagnostic system withfault indicator |

## Heating concept

| | |
|---|---|
| **Heating** | corrosion-proof large-area heating on the outside of the interior |

## Standard equipment

| | |
|---|---|
| **Cover** | Stainless steel gable cover |
| **Drain system** | innovative drain system - easy to empty |
| **Timer** | digital timer from 1 min. up to 99 hours 59 min., visual and acoustic |

## Stainless steel interior

| | |
|---|---|
| **Interior** | Deep-drawn stainless steel tray (stainless steel W.St. 1-4301), without corners and edges for easy cleaning incl. central drain (no disturbing installations) |
| **Dimensions** | $l_{(A)}$ x $w_{(B)}$ x $h_{(C)}$: 277 x 217 x 150 mm |
| **Volume** | 7.5 l |
| **Liquid level min.** | 40 mm |
| **Liquid level max.** | 114 mm |


Memmert GmbH + Co. KG | Tel. +49 (0) 9122/925-0 | E-Mail info@memmert.com

## Textured stainless steel casing

| | |
|---|---|
| **Dimensions** | $l_{(D)}$ x $w_{(E)}$ x $h_{(F2)}$: 479 x 289 x 375 mm |

## Electrical data

| | |
|---|---|
| **Voltage**<br>**Electrical load** | 230 V, 50/60 Hz<br>approx. 1000 W |
| **Voltage**<br>**Electrical load** | 115 V, 50/60 Hz<br>approx. 1000 W |

## Ambient conditions

| | |
|---|---|
| **Installation** | The vent openings in the left and back side must remain unobstructed. The distance to the wall must be at least 100 mm on the sides and at least 150 mm to the rear. The minimum spacing from the top of the bath to the next ceiling is 750 mm. |
| **Ambient temperature** | +5 °C to +40 °C |
| **Humidity rh** | max. 80 %, non-condensing |
| **Overvoltage category** | II |
| **Pollution degree** | 2 |
| **Water bath** | |

## Packing/shipping data

| | |
|---|---|
| **Dimensions approx incl. carton** | l x w x h: 579 x 389 x 475 mm |
| **Transport information** | The appliances must be transported upright |
| **Customs tariff number** | 8419 8998 |
| **Country of origin** | Federal Republic of Germany |
| **WEEE-Reg.-No.** | DE 66812464 |
| **Net weight** | approx. 11 kg |
| **Gross weight carton** | approx. 13 kg |

## Standard units are safety-approved and bear the test marks